HYLAN & BROWN
BOATBUILDERS
BROOKLIN, MAINE

OONAGH

The anti-RIB

In traditional boating circles, it is a long cherished tradition to rail against inflatables, and there are some good reasons. Because rowing them to good effect is not possible, inflatables almost invariably wind up with an outboard on the transom. Outboards produce several varieties of pollution – sound, air, water – and have a tendency to foster questionable skylarking by bored youngsters. And recently, mankind has discovered that burning petroleum might just have another big drawback as well.

The new generation of rigid bottom inflatables, or RIBs have some additional vices. They abandon what used to be the most powerful argument for inflatables – that they can be deflated and stored aboard for longer passages. They feature deepish vee bottoms, which make rowing even more impossible, and only really show any advantage with the application of lots of petroleum. When you try to use that horsepower, a RIB will first plow itself into a deep trough, then jump up onto a plane with unnerving rapidity – they have no sweet spot between the two.

My hunch is that the rush to RIBs is driven by the fact that we baby boomers (the flower children who were going to bring us to the age of Aquarius, remember?) are losing our balance, muscle mass, joint mobility (and a bunch of other functions too embarrassing to mention), and are happy to have a dinghy that is as stable as a town hall, can be driven like a bumper car, and gives us an airtight excuse for not rowing. Come on Flower Children, let's take back the high road!

Inflatable boats have some undeniable advantages. First and probably foremost is their tremendous stability. They also have wonderful built in fendering – no worries about marring your perfect topsides when coming alongside in a chop. And when you get alongside, you can stand up on the inflated pontoons to get a boost for climbing aboard the mother ship. OONAGH is my attempt to combine some of the best qualities of inflatables with the advantages of a traditional dinghy, and put it into a package that is a little less hostile to the planet.

OONAGH is named for the wife of the famous Irish giant Fin McCoul. Even though he

10 Frank Day Lane, Brooklin ME 04616 207-359-9807
Ellery@DHylanBoats.com Doug@DhylanBoats.com

was a giant, Fin could sometimes get himself into trouble, and OONAGH was always there to help get him out. She was big and hard working, clever and resourceful. She could do what needed doing, if not by strength, then by cunning.

My OONAGH is a pram, a form that packs a lot of boat into a short length. She is wide, the time honored way to get good stability. With 5 feet of beam she is about 10" wider than a normal rowing tender, or about the same beam as a typical inflatable. Her bottom lines sweep up at the transom – if you are careful to see to proper loading (keep weights forward, don't let the transom drag) she will put in a respectable performance under oars.

To help protect your topsides, OONAGH's plans show the over sized cushioned gunwale guard more commonly used on docks. She will tow much more easily than an inflatable, and row four times as well. Within the same general size she will give much more interior room, and her passengers will be down in the boat rather than sitting up on the pontoons where soggy drawers are almost inevitable. And we don't even need to mention sailing, do we? With a little care, your OONAGH can be passed on to your grandchildren.

I know that many people are going to want to put a motor on OONAGH, so she is designed for it. The same tucked up transom that makes for decent rowing will preclude planing, so there is no point in putting anything more than 2 horsepower back there. In fact, one horsepower is as much as she can really use effectively. This begs the question – why not electric? Why not indeed! A small trolling motor will push her along nicely, and you will be able to carry on a private conversation while enjoying the scenery.

Beyond use as a tender, OONAGH will make a fine boat for family sailing, fishing trips or just an evening row with the kids. Her simple construction and detailed plans will make for a good family construction project as well. I can guarantee that the experience of building, then using, a small boat will be a treasure that your kids will carry with them throughout life.

OONAGH PARTICULARS:
LOA – 11' 8"
LWL – 9'
BEAM – 60"
DRAFT – 5" board up, 22" board down.
HULL TYPE – Multichine
WEIGHT – Approximately 170 lb.
SAIL AREA – 68 sq. ft.
CONSTRUCTION – Glued lapstrake plywood
SUITABLE FOR -- Somewhat protected waters
TRAILERABLE – Yes
SKILL LEVEL REQUIRED – Beginner
LOFTING REQUIRED – No
PLANS SHEETS: On six sheets: sail plan, lines & construction plan, building jig, full size patterns, plank layout.

PLANS COST -- $85.00 plus S & H (check for current rates). Plans mailed rolled, Priority Mail. To order, please send check or money order to Plans at Hylan & Brown, Brooklin, ME 04616. Or, order on line using PayPal at DHylanBoats.com.

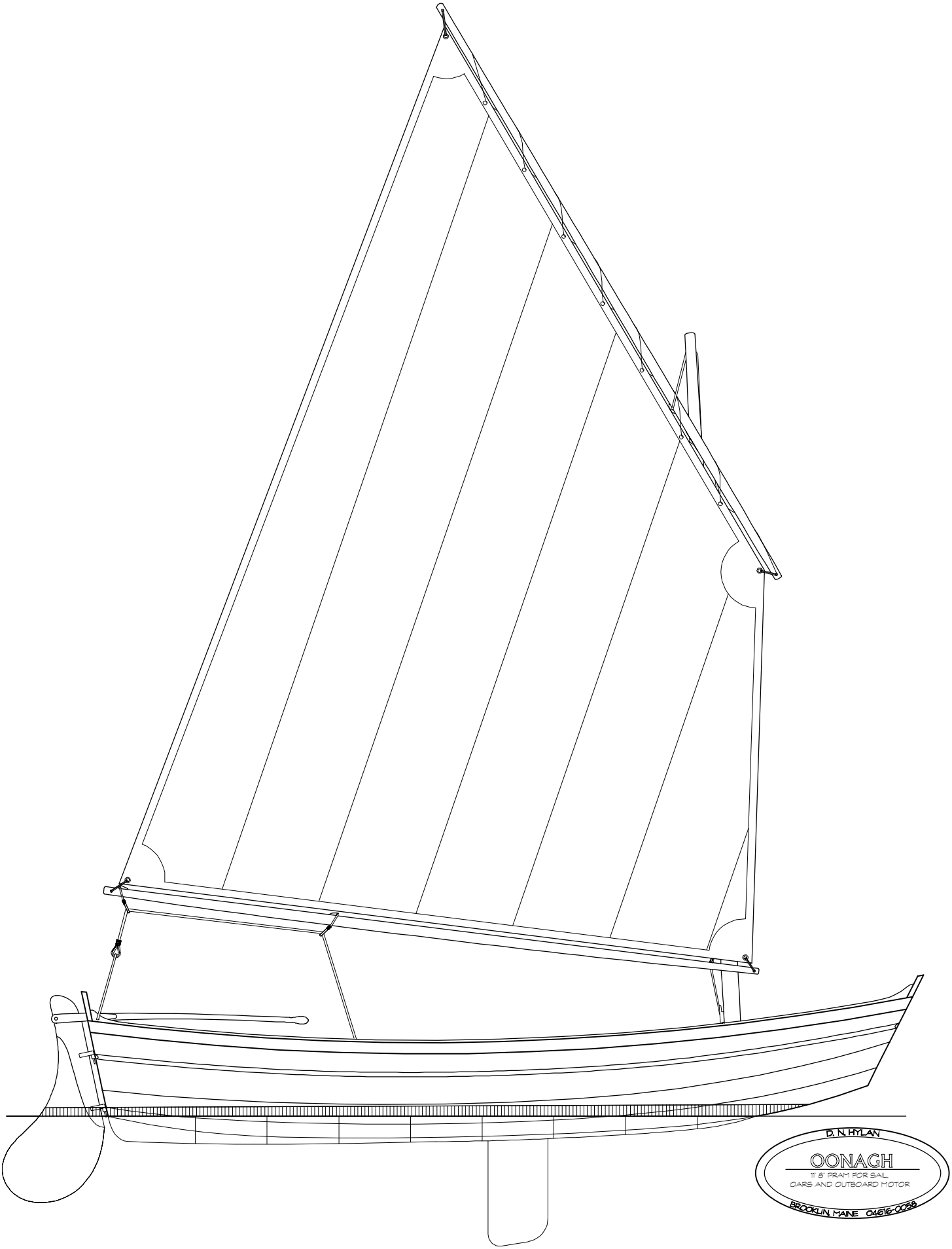
D. N. HYLAN
OONAGH
11' 8" PRAM FOR SAIL,
OARS AND OUTBOARD MOTOR
BROOKLIN, MAINE 04616-0028

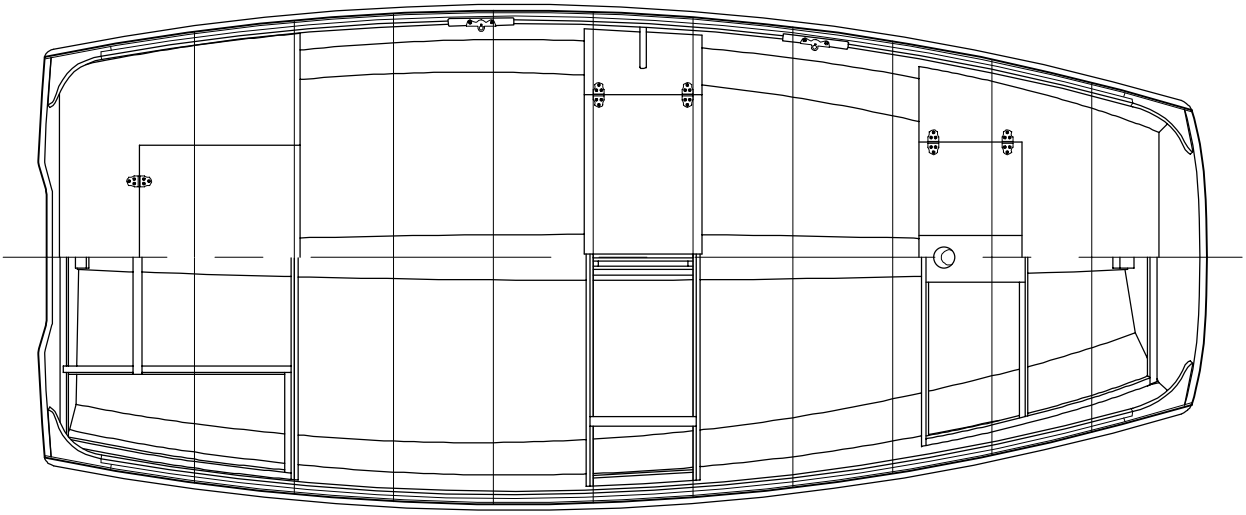

PARTICULARS

LOA	11' 8"
LWL	17' 4"
BEAM	60"
DRAFT, BOARD UP	5"
BOARD DOWN	22"
APPROX WT.	170 LB.

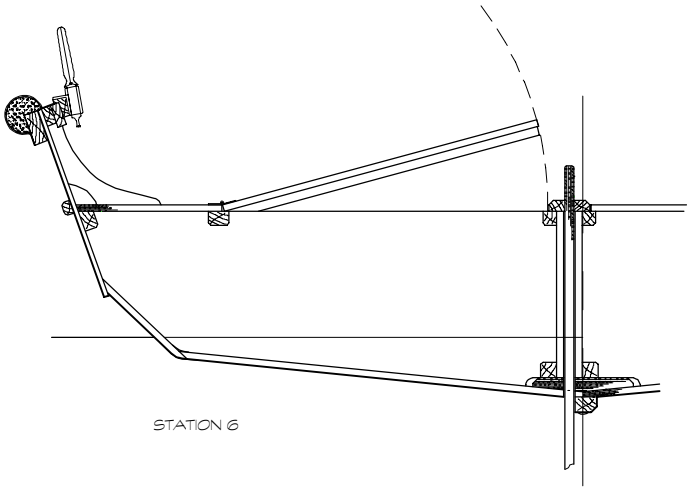

STATION 6

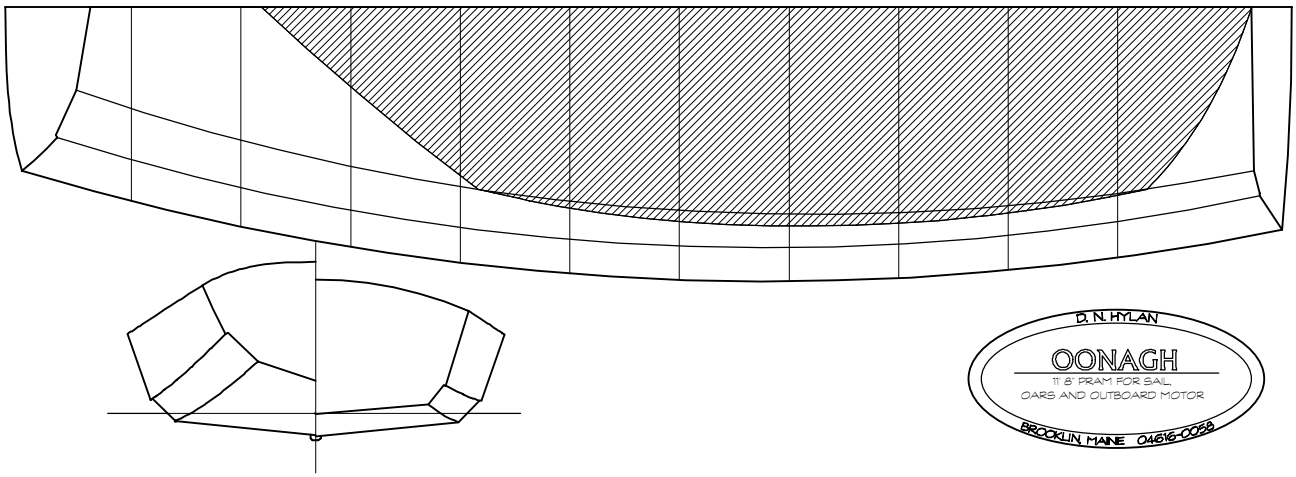

D. N. HYLAN

OONAGH

11' 8" PRAM FOR SAIL, OARS AND OUTBOARD MOTOR

BROOKLIN, MAINE 04616-0058